Manufacturer's guarantee

The manufacturing company provides guarantee certificates for a product within 24 months from the date of sale.

Guarantee repair is not made in the cases of:

1. Expiration of product guarantee period;
2. Controller failure as a result of misconnection;
3. Damages caused by ingress of moisture;
4. Excess of the maximum electric parameters;
5. In the presence of scratches of mechanical influences;
6. In the cases of independent repair, controller upgrading.

Serial number _____

Date of manufacture _____

Sale date _____

Packer _____

603000, 4A Nesterova str., Nizhny Novgorod, Russia
Tel.: 007 (831) 260 1087

www.maksbright.com

MAKSBRIGHT

PROFESSIONAL LED SOLUTIONS

USER MANUAL

Sigma Element

EIGHT-CHANNEL LED CONTROLLER

Made in Russia

Tel: 007 (831) 260 1087
www.maksbright.com

Short description

The controller (Sigma Element) represents the device for management of the light equipment, such as light-emitting diode modules, strips, and other light sources similar to them or other devices on their basis. The controller operates the lighting equipment according to pre-prepared scenario. The scenario allows to change dynamically brightness of luminescence and time of luminescence of light-emitting diode modules.

Delivery set

light-emitting diode controller	1piece
passport	1piece
sealant	1piece
fixing screws	4 pieces
packing container	1 piece
wiring diagram	1 piece

Technical characteristics

Number of channels in one controller	8
Supply voltage of direct current, Volt	4 ... 12
Maximum admissible current on one channel, Ampere	10
Total maximum current, Ampere	35
Quantity of gradation of brightness	128
Number of scenarios, piece	to 30
Unification of several scenarios	Yes
Overall dimensions, mm	115x87x40
Weight, no more than, g	250
Protection class	IP65
Temperature range	from - 40 °C up to + 40 °C

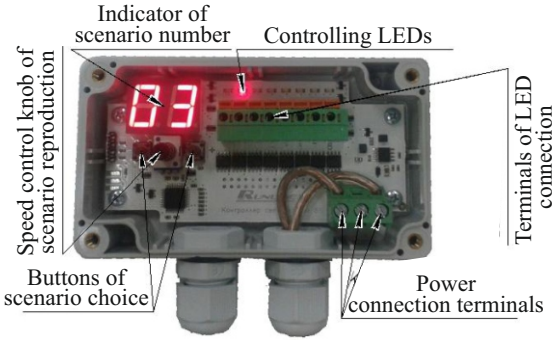

Fig. 1 Purpose of controlling elements and indication

Preparation of the controller for operation

If the controller has been under conditions with low air temperature and then it is brought into the warm room, in this case its switching on should be carried out not earlier than in one hour (time necessary for evaporation of condensate).

Choice of scenario and control of speed

Mode of reproduction of one scenario

To choose the scenario (program) of controller operation it is necessary to use the buttons of choice of scenario ("+" or "-"), located on the printed-circuit board.

The "zero" scenario – all scenarios are reproduced in turn.

To change the speed of reproduction of the scenario it is necessary to turn speed control knob on clock-wise or counter-clockwise. At turning control knob clockwise the speed decreases to 4 seconds one shot, and counter-clockwise –increases to 1/64 seconds one shot.

At scenario change the speed of reproduction keeps.

After power supply shutdown the chosen scenario and speed are saved in non-volatile memory.

Mode of reproduction of several scenarios

To record several scenarios it is necessary:

1.Simultaneously to press and hold two buttons "+" and "-". The right point on the indicator starts to blink (input into the mode of record of several scenarios is made).

2.By pressing the buttons "+" or "-" choose the necessary scenario and set the necessary speed with the help of control knob for this scenario.

3.Press and hold the button "+". The left point and number of the recorded scenarios will light up and go out on the indicator. (The chosen scenario and speed for this scenario are saved in memory.)

4.To choose the following scenario - to repeat the item 2 and 3. There is a possibility of choice of the same scenario several times one after another. Number of the kept scenarios is up to 64.

5.Simultaneously to press and hold two buttons "+" and "-". The right point on the indicator will light up. (Move out of record mode of several scenarios and reproduction of the saved scenarios begins. It is impossible to regulate the speed as the speed for each scenario is saved individually.) After power supply shutdown the chosen scenario is saved in non-volatile memory.

6.To rewrite the saved scenarios it is necessary to repeat the items 1 - 5.

7.To enter the mode of reproduction of one scenario:

- simultaneously to press and hold two buttons "+" and "-" (enter into the record mode);
- the second time simultaneously to press and hold two buttons "+" and "-" (all points go out, it is the mode of reproduction of one scenario).

Purpose of controlling elements and indications are presented on figure 1.

Installation and connection of controller

To remove the top cover carefully. Put the controller on a level surface with the cable inputs down and also fix it with the help of two self-driving screws.

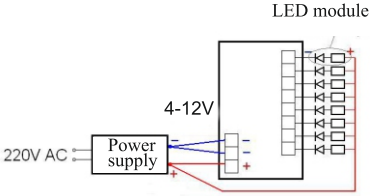

Pass wires through cable input and connect them to plugs according to the connection scheme (fig. 2); observing polarity of connection, reliably fix them with screws. At light-emitting diode lines (clusters) the general wire is positive supply voltage. Negative wires are to be connected to plugs of the respective channels.

Fig. 2 Scheme of connection of the controller

ATTENTION! Do not connect the controller to 220 Volts circuit. Do not allow short circuit of channels.